BULMAN Products, Inc.
1650 McReynolds Avenue, NW
Grand Rapids, Michigan 49504-2091
616/363-4416, 616/363-4417 Fax: 616/363-0380
www.bulmanproducts.com

ASSEMBLY INSTRUCTIONS FOR B-2 K.D. VERTICAL RACK R997-20,27,36,48

Fasten the 2 feet into the channel brackets as shown in the illustration on a flat level surface using the 4 bolts, nuts, washers & lock washers provided.

UNIT SIZE	REG KNIFE	SERRATED KNIFE
20	26120P	992020
27	26127P	992727
36	26138P	993636
48	26150P	994848

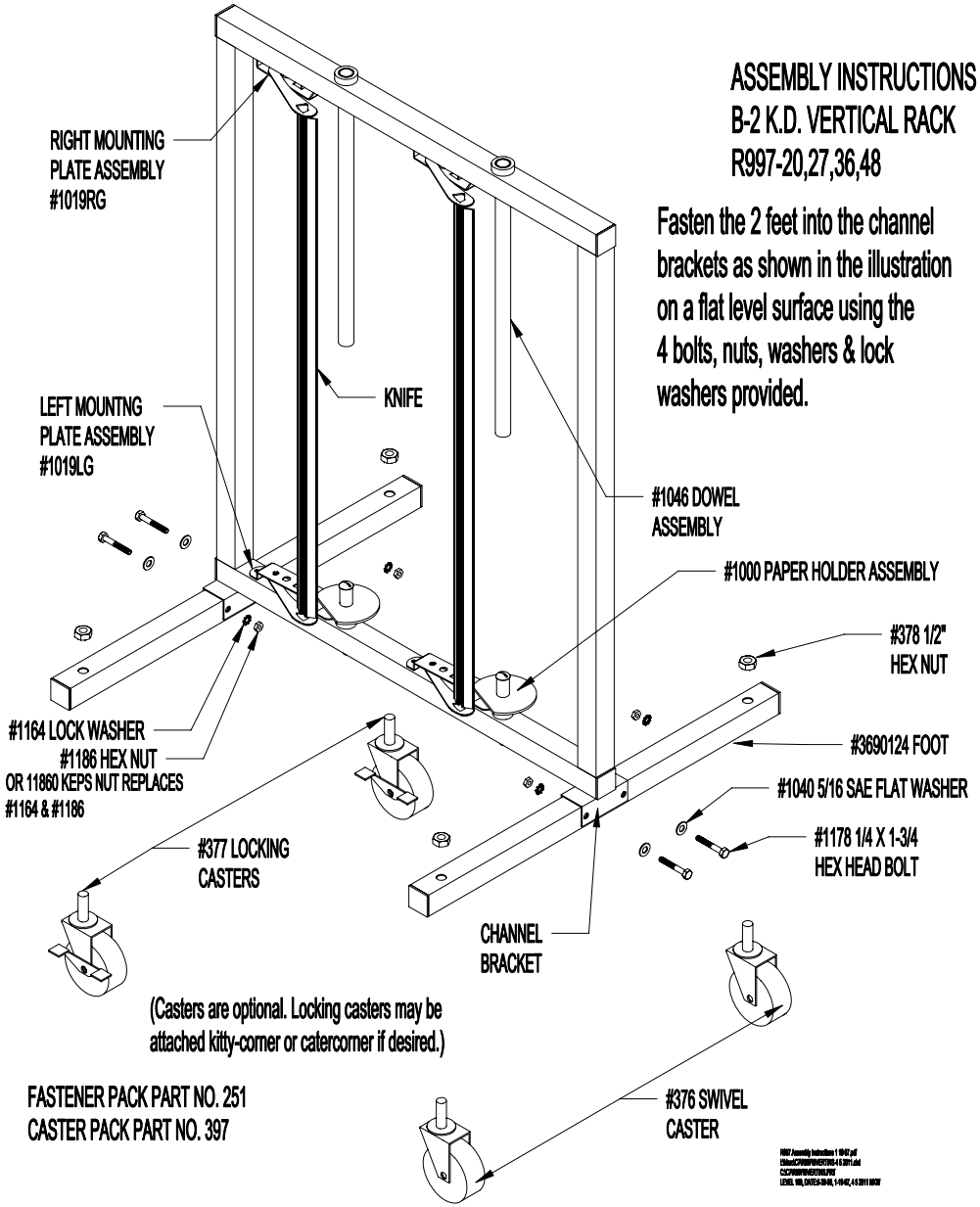

(Casters are optional. Locking casters may be attached kitty-corner or catercorner if desired.)

FASTENER PACK PART NO. 251
CASTER PACK PART NO. 397
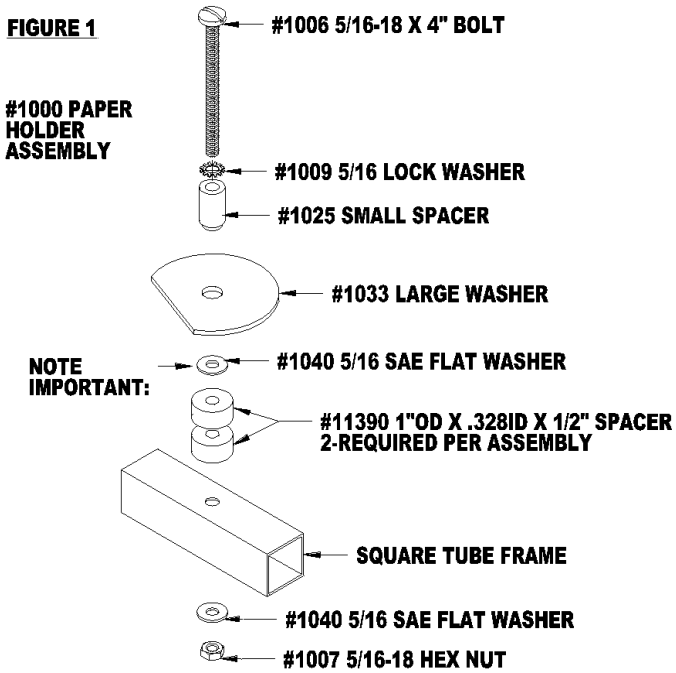
FIGURE 1