Model 565-L Executive Leather Guest Chair

Parts Listing

A
Chair Back
1 Unit

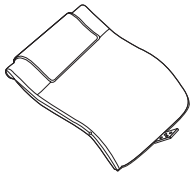

B
Chair Seat
1 Unit

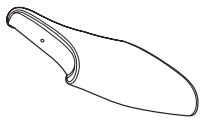

C
Chair Base
1 Unit

D
Chair Arms
2 Units

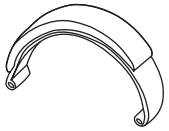

E
8x25mm Screws
4 Units

F
8x30mm Screws
4 Units

G
Arm Screws
4 Units

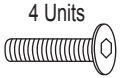

H
Allen Wrench
1 Unit

I
Toothed Washers
4 Units

J
Flat Washer
4 Units

K
Arm Caps
4 Units

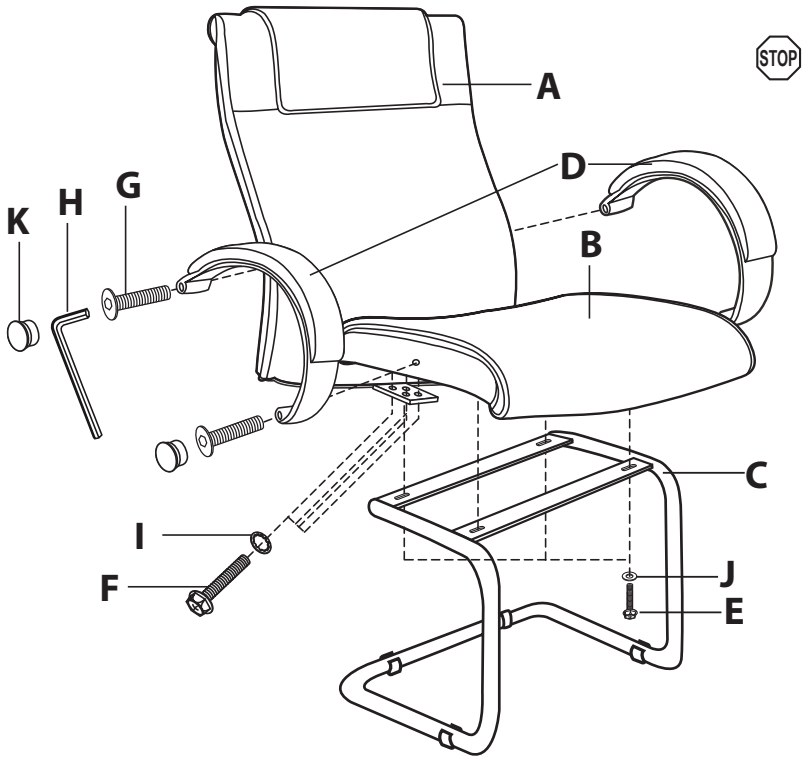

Assembly Instructions

Tools Needed: Phillips Head Screwdriver
Please read all instructions before assembly.

Step 1: Attach mounting plate on Chair Back (A) to Chair Seat (B) with 8x30mm Screws (F) and Toothed Washers (I), using a screwdriver.

Step 2: Attach Chair Base (C) to Chair Seat (B) by inserting 8x25mm Screws (E) through Flat Washers (J) and through cross bars on Chair Base (C) and then into Chair Seat (B).

Step 3: Attach Chair Arms (D) to Chair Back (A) and Chair Seat (B) using Arm Screws (G) and Allen Wrench (H). Cover screw holes with Arm Caps (K).

Step 4: Make sure all screws are secure and in place..

WEIGHT CAPACITY: 250 lbs.

Assembly Notes:
During assembly, hand tighten screw only when all screws are in place, you may then tighten all screws completely.

CAUTION:
1. Do not use this chair as a step ladder.
2. Check for loose screws and tighten them every 6 months.

06.11.2010

ofm INC.
Furniture For The Real Office™

161 Tradition Trail Holly Springs, NC, 27540
800-520-7471 (voice) 919-362-4765 (fax)
919- 303-6389 (voice) www.ofminc.com
support@ofminc.com